Operating Instruction

FV100 series PG-CAN feedback card

Version V1.2

Dear users:

Thanks for choosing our products, before using, please read instruction manual carefully. Otherwise, due to an improper use or a lack of understanding for this product, may it cause an unnecessary loss or unpleasant things.

During the use, if there is a quality problem, please contact our agents or contact us directly, and welcome to give us advice to improve this product.

Content

Encoder..... 2

1.1 Abstract.....2
1.2 Assorting and selecting for PG card.....2
1.3 Installation for PG card..... 3
1.4 Note for using PG card.....6
1.5 Parameter introductions for PG card.....9

CAN bus..... 11

2.1 Abstract.....11
2.2 Selecting for CAN card 11
2.3 Installation for CAN card 11
2.4 Note for using CAN card.....11
2.5 Parameter introductions for CAN card.....12

Encoder

1.1 Abstract

PG(Plus Generator)feedback card, to connect encoder and inverter. Feed back the real-time speed by adapting the signal of plus encoder, so that the inverter can control the speed of motor accurately. When we ask the high accuracy of the speed, installing a PG card can control the speed and direction of the motor effectively. Using FV100 series inverter can make a close-loop control if equipped with PG card and the driving method is V/F control or vector control. At the mode of close-loop, the speed ratio can up to 1:1000 and can content the high accurate requirement of servo control.

1.2 Assorting and selecting for PG card

Due to many kinds of output of plus encoders, users should choose a suitable PG card according to the type of encoder when using Kinco FV100 series inverter to equip with a PG card.

Instruction for the type of PG card:

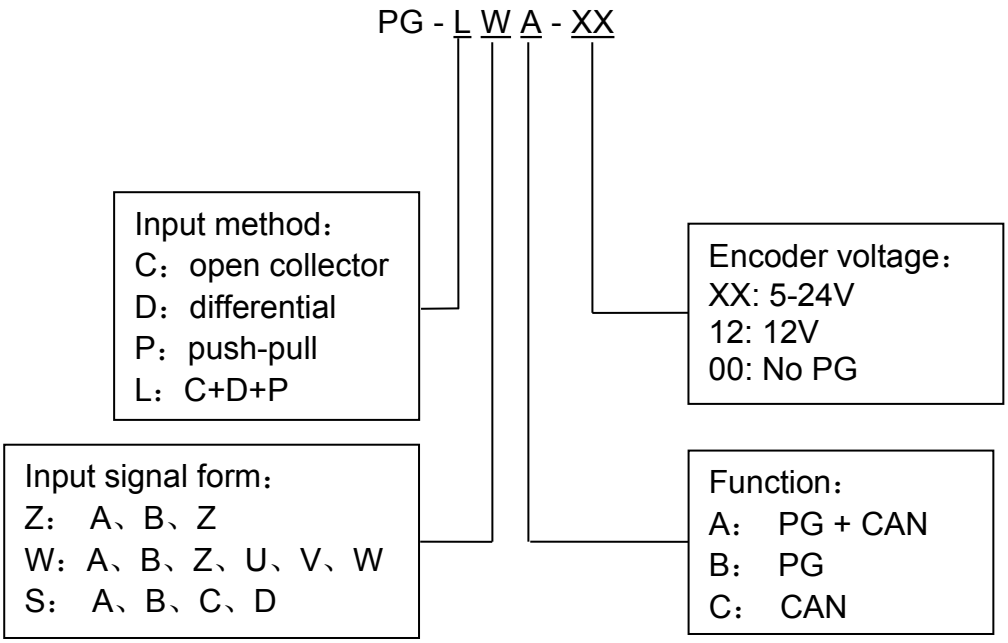

Instruction for encoder signal:

Open collector and push-pull encoder:

A and B are two kinds of orthogonal signals, count A phase or B phase ‘s pulse number to get the speed of motor at a unit time. And the direction is judged by the relation of advance or delay of A and B.

Z is a zero signal which means that the encoder will output a signal after every circle.

(1)Differential encoder signal:

A+、A-、B+、B- are two groups of orthogonal signals. as A group, A+ and A- are two opposite signals. As B group, B+ and B- are two opposite signals. A group and B group are also orthogonal. So, it is same with open collector and push-pull encoder.

Z+ and Z- are a group of zero signals, the encoder will output a signal after every circle also.

U+、U-，V+、V-，W+、W- are detection signal for synchronous machine position. Those three group of signals are 120° phase difference.

(3)The meaning of the number on encoder body:

The number means the pulses of A or B output after encoder rotating a circle, unit: pulse/revolution(ppr).

1.3 Installation for PG card

Steps:

1.Cut off power supply of inverter, take off inverter’s cover until the green lamp puts out.

2.There is 20 pins with double line in the inverter. Insert the PG card to inverter.

3.Use M3*6 the screw of cross recessed to make the PG card stable

4.The picture is as below:

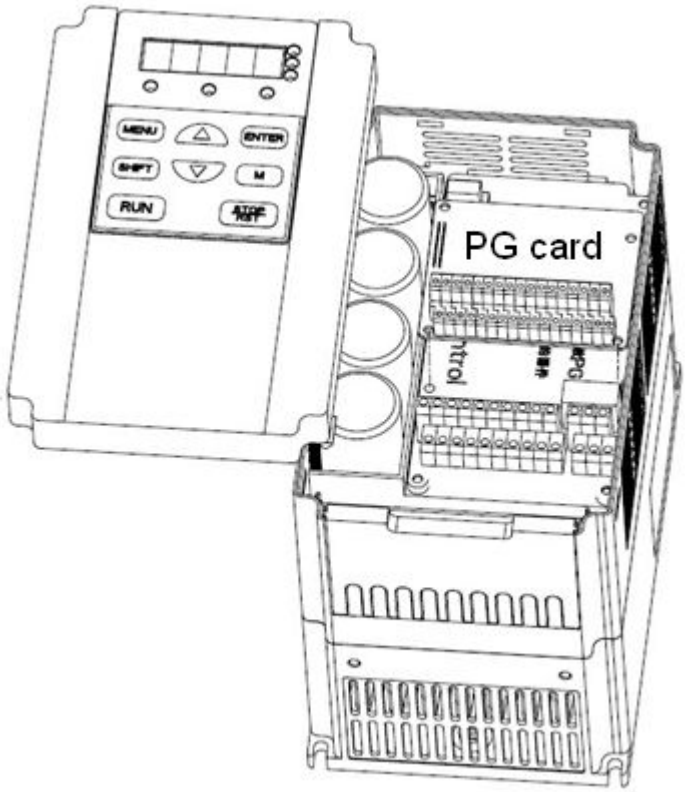

5.others instruction

(1)PG card's appearance:

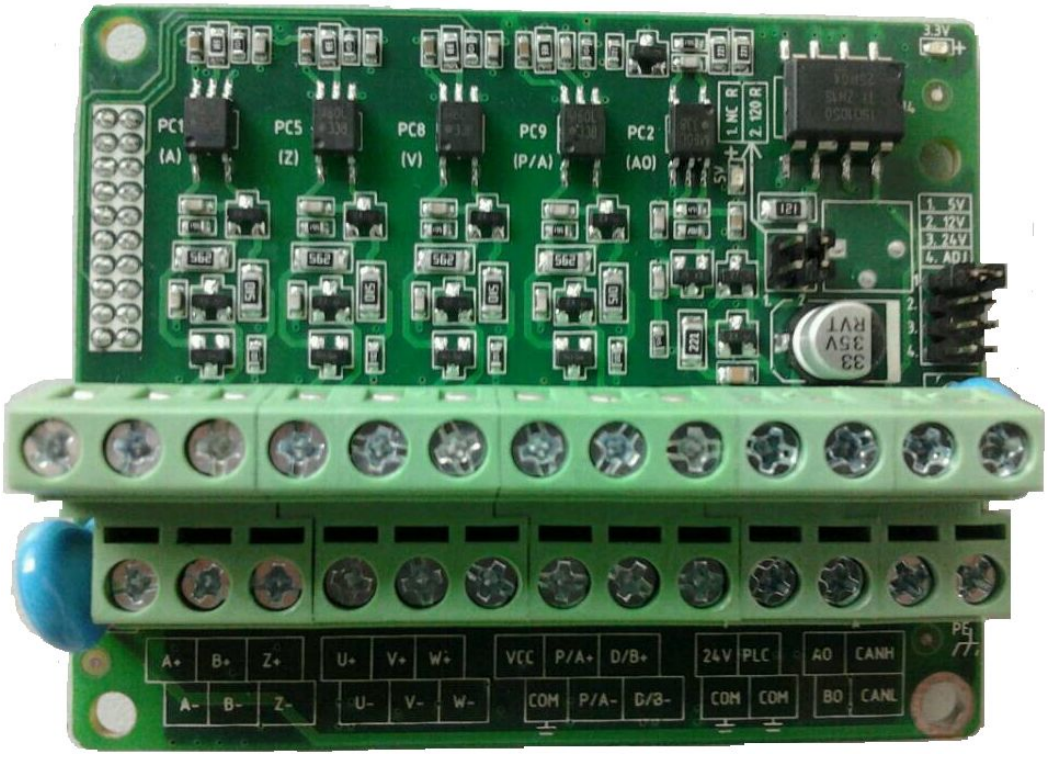

(2)Terminal arrangement diagram for PG card

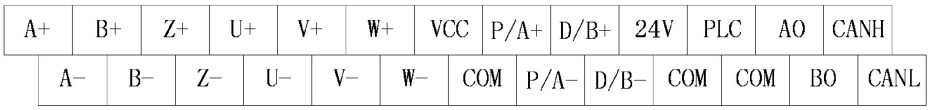

(3)Terminal function of PG card

Terminal No.	name	description	Terminal No.	Name	Description
1	A+	A+pulse signal input	13	VCC	Aid power positive pole
2	A-	A-pulse signal input	14	COM	Aid power negative pole
3	B+	B+pulse signal input	15	P/A+	pulse+/A+
4	B-	B-pulse signal input	16	P/A-	pulse-/A-
5	Z+	Z+pulse signal input	17	D/B+	direction+/B+
6	Z-	Z-pulse signal input	18	D/B-	direction-/B-
7	U+	U+pulse signal input	19	24V	Aid power +24V
8	U-	U-pulse signal input	20	PLC	Aid power negative pole
9	V+	V+pulse signal input	21	AO	A phase output
10	V-	V-pulse signal input	22	BO	B phase output
11	W+	W+pulse signal input	23	CANH	CAN HIGH
12	W-	W-pulse signal input	24	CANL	CAN LOW

(4)The rule to wire for the PG card:

①the signal line should separate with its own main circuit line and other power or electric circuit line.

②the total length of PG card must be with in the limit of 100 meters.

③in order to avoid the malfunction by the noise jamming, please use shielding wire

④for the termination point, do not cover with tin else it maybe lead to poor contact.

⑤the earth terminal PE must touch the ground.

1.4 Note for using PG card

There are two place for jumping on the circuit board of PG card. One of the place is used to choose the power supply for encoder, they are 5V, 12V, 24V. And another place is used whether to choose the terminal resistance or not.

The power supply for encoder can choose by jumping, on the top-layer of circuit board, it is marked with 1, 2, 3 which is corresponding to 5V, 12V, 24V.

1.Wiring for PG card with the type of differential

(1)Feedback from double signal of pulse A-B:

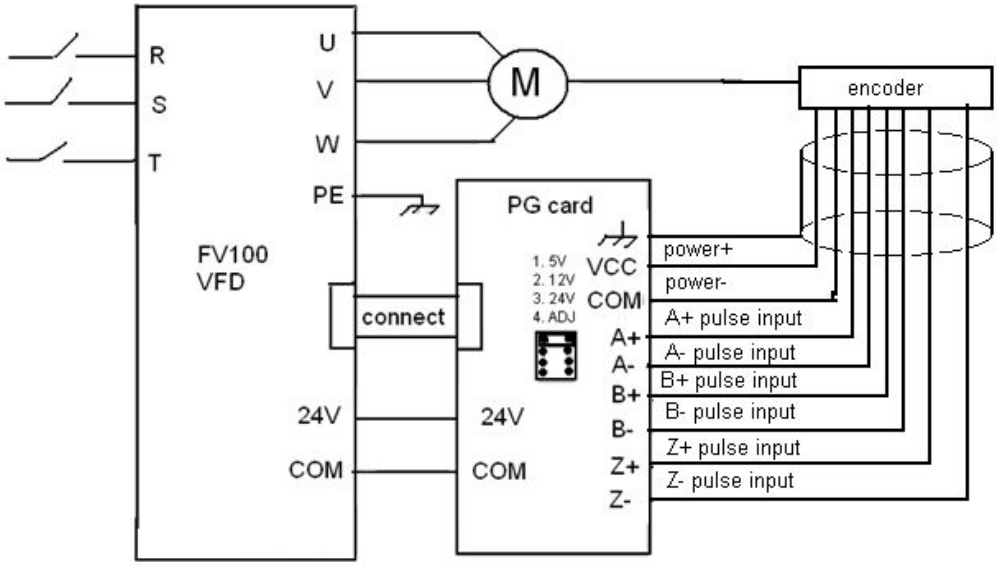

(2)Feedback from double signal of pulse A-B and A, B frequency division:

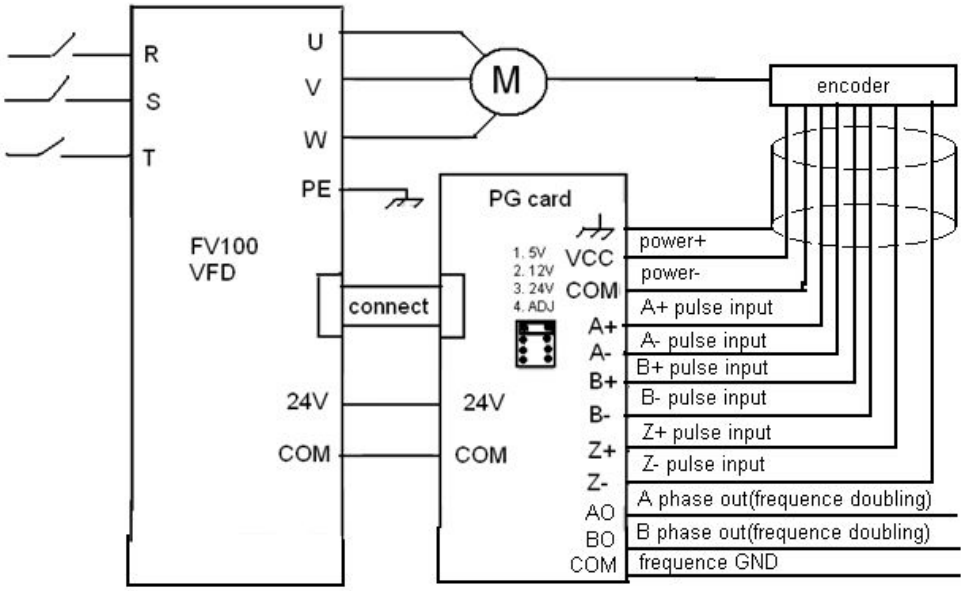

2.Wiring for PG card with the type of push-pull and open collector:

(1)Feedback from double signal of pulse A-B:

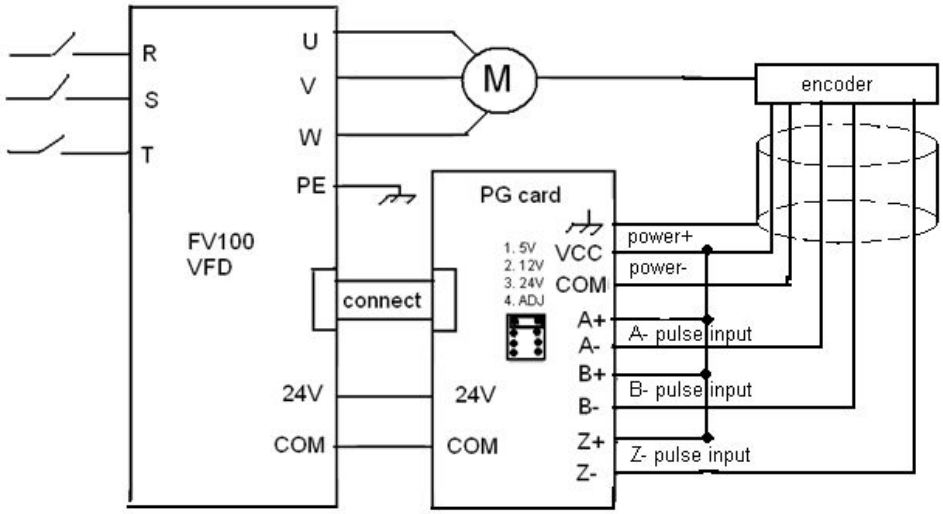

(2)Feedback from double signal of pulse A-B and A, B frequency division:

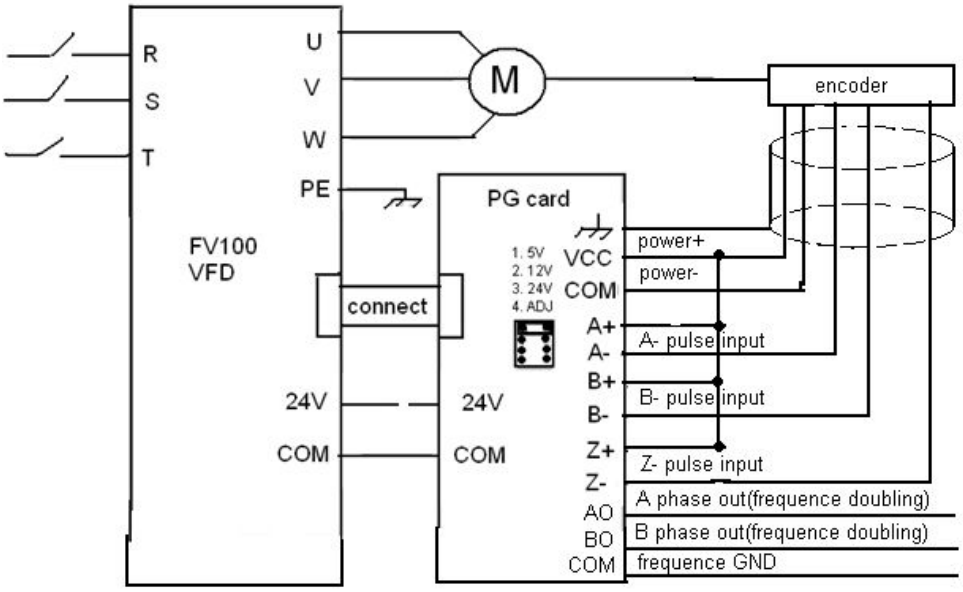

3.Wiring for PG card with the type of U, V, W encoder

(1)Differential PG card

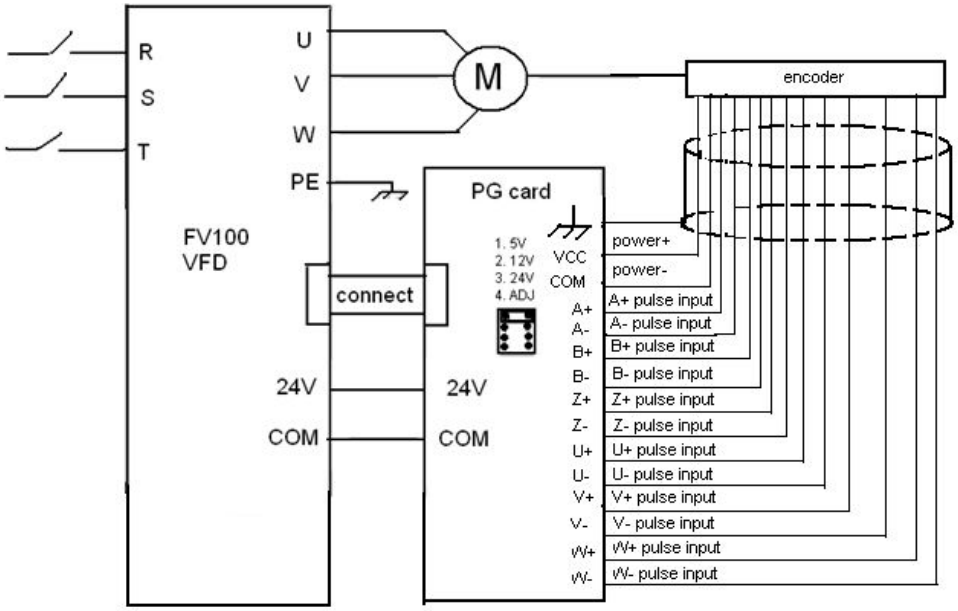

(2)Push-pull and open collector PG card:

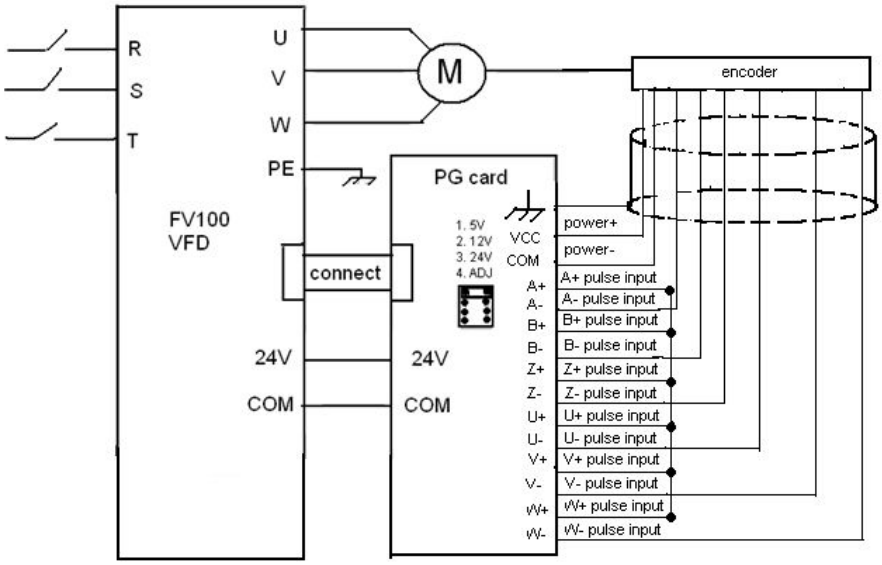

3.Wiring for PG card when inverter is used to realize some works like servo.

(1)Pulse input by A/B phase

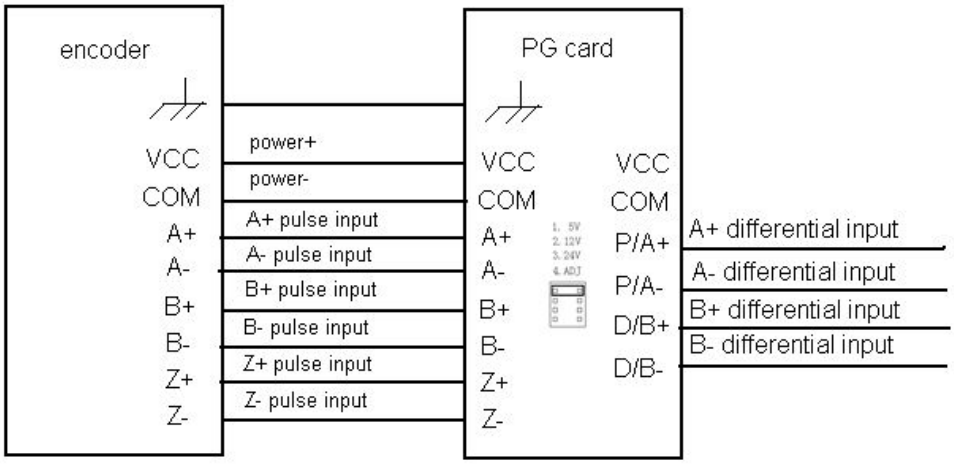

(2)Input by direction+pulse

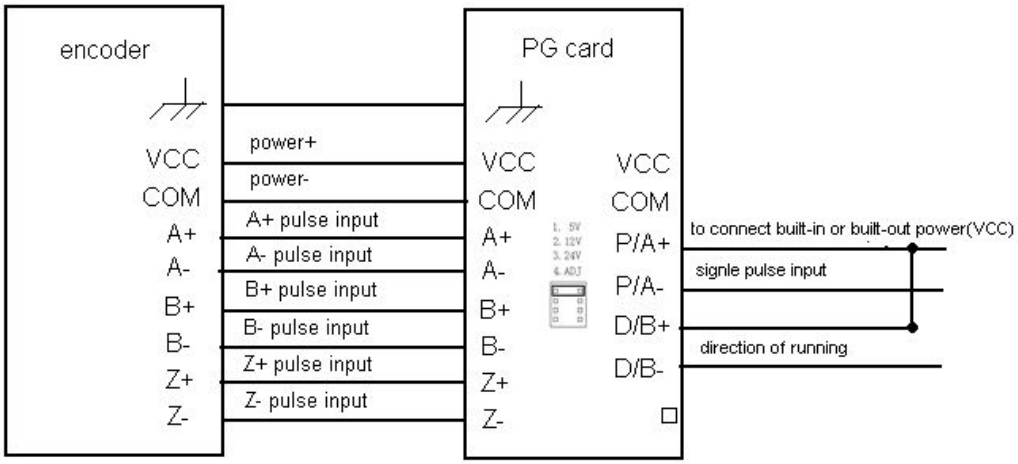

1.5 Parameter setting for PG card

After installation for PG card, users need to set some parameter:

Function code	Name	Range to set	Min unit	default value	change	Range limited
A0.01	Method for control	0:vector control without PG 1:vector control with PG 2:VF control	1	0	×	0~2
A7.00	The type of PG card	0:ABZ incremental type 1:UVW incremental type 2:Sine and cosine type 3:reserved	1	0	○	0~3
A7.01	the quantity of pulses for per circle	1~10000	1	2048	○	1~10000
A7.02	Rotating direction	0:A advanced than B 1:B advanced than A	1	0	×	0~1
A7.03	Filter coefficient for encoder's signal	Units:0~9 high speed filtering Tens:0~9 low speed filtering	1	30H	○	0~99H
A7.04	detecting time when PG card disconnected	0.0:no action 0.1~10.0	0.1s	0.0	○	0~100
A7.05	Reduction ratio between motor and encoder	0.001~65.535	0.001	1	○	0~65535

Notes：

○:changeable when running.

×:unchangeable when running.

*:actual parameter value,unchangeable.

—:factory setting, unchangeable.

Can bus

2.1 Abstract

CAN card，used to connect PLC or HMI with inverter. Using FV100 series inverter can equip with a CAN card to control by bus to content the high speed inquiry of bus control.

2.2 Selecting for CAN card

Please reference encoder part, 1.2 assorting and selecting for PG card

2.3 Installation for CAN card

Please reference encoder part, 1.3 installation for PG card.

2.4 Note for using CAN card

Wiring diagram of CAN card:

In this diagram, the jumper is used whether to choose terminal 120 ohm resistance when using CAN communication. If the jumper is on the left side, the terminal 120 ohm resistance is unavailable. If the jumper is on the right side, the 120 ohm resistance is accessed into CAN communication.

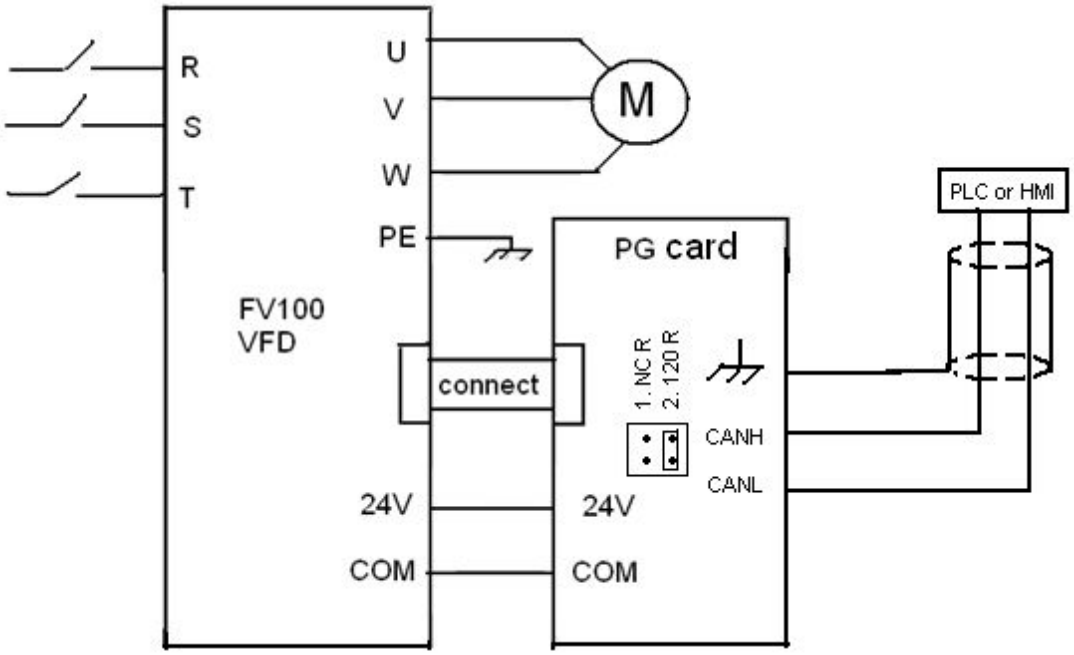

2.5 Parameter introductions for CAN card

After installation for CAN card, users need to set some parameter:

Function code	Name	Range setting	Min unit	Default value	Change	Range limited
A0.04	Channel selecting for running command	0:control by keyboard 1: control by terminal block 2: control by communication	1	1	○	0~2
b3.00	Communicate configuration	Units of LED:choose the bits for per second 0:50KBPS 1:100KBPS 2:125KBPS 3:250KBPS 4:500KBPS 5:1MBPS	1	001	×	0~5H
b3.01	The address of the machine	0~247,0 is a broadcast address.	1	5	×	0~247

notes：

○:changeable when running.

×:unchangeable when running.

*:actual parameter value,unchangeable.

—:factory setting, unchangeable.